Div. 15 – Plumbing: Deep Dive #2

JULY 26, 2021

Brinkmann CONSTRUCTORS

Training Objectives

- Case Studies
- PISER Exercise
- ADA/FHA
- S.M.A.R.T. Ideas
- Unit Costs
- Means and Methods
- Scheduling

Brinkmann CONSTRUCTORS

Case Study #1 – Streets of St. Charles

- Four (4) floor drains in existing garage discharge into sanitary line that runs through project site.
- Current design is to re-route storm sewer around the proposed building.
- Trench drain existing at bottom of garage ramp and tied into storm.
- Above lines run ~10’ deeper than current storm sewer main that is looking to be relocated.

Brinkmann CONSTRUCTORS

Case Study #1 – Streets of St. Charles

Left: Existing Site Plan
Below: Tie in Location at Existing

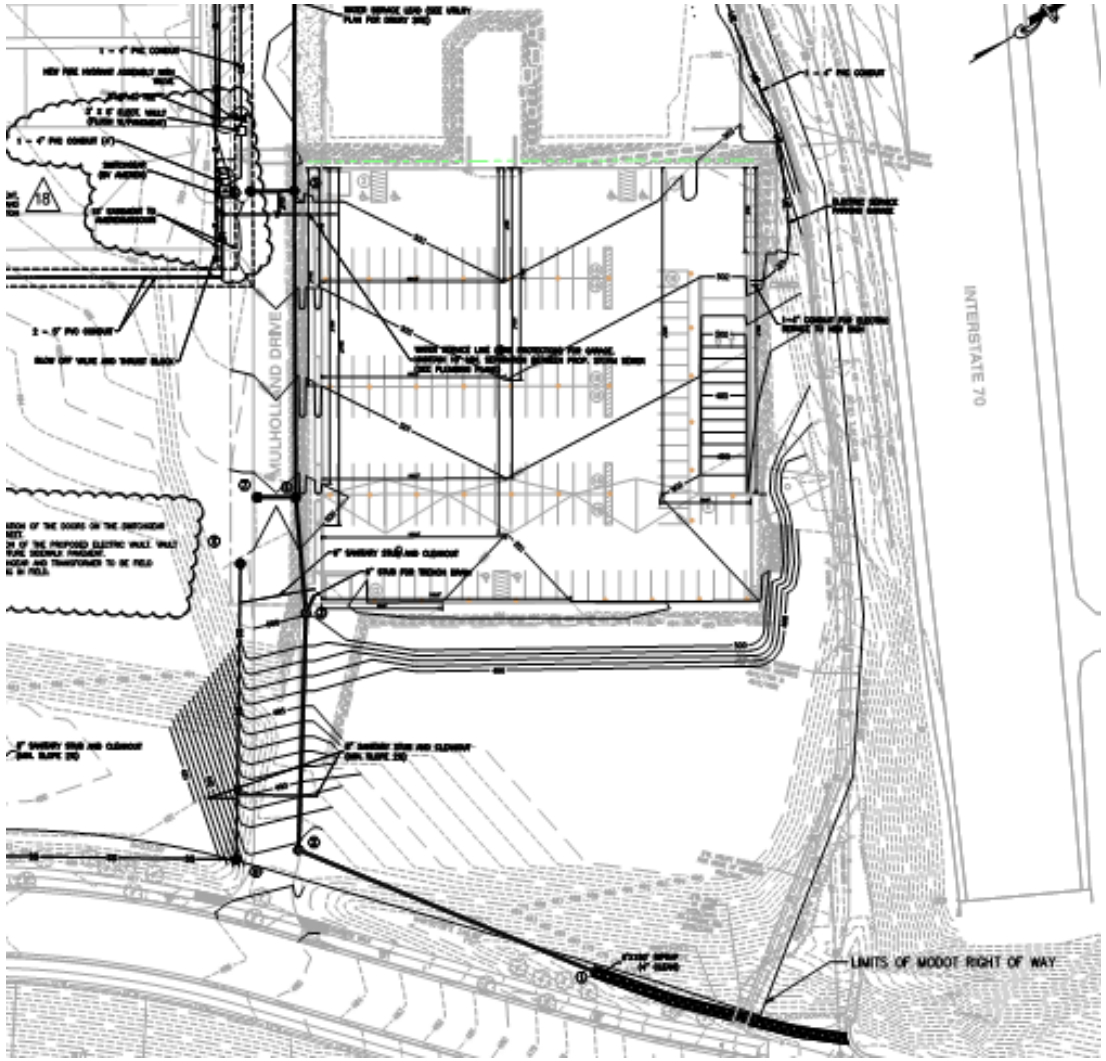

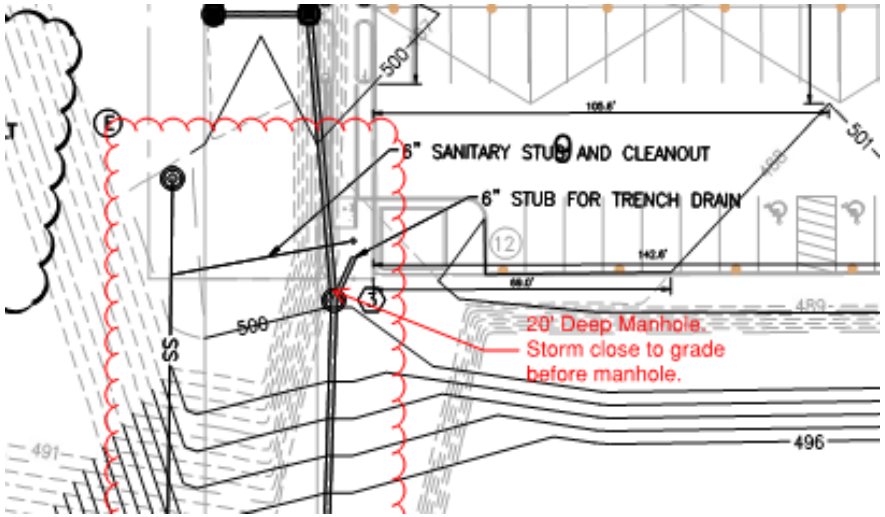

Brinkmann CONSTRUCTORS

Case Study #1 – Streets of St. Charles

Brinkmann CONSTRUCTORS

Case Study #1 – Streets of St. Charles

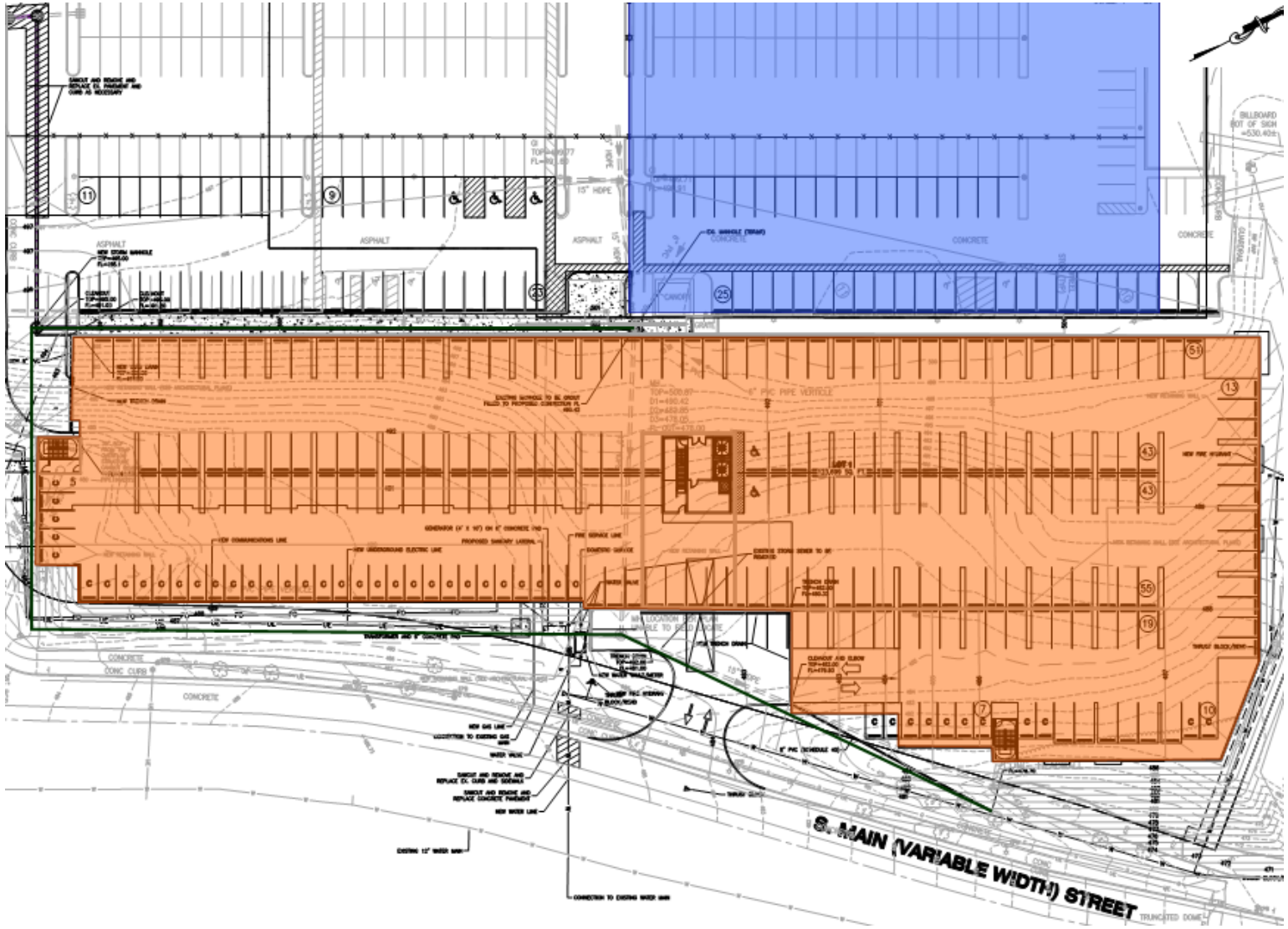

Brinkmann CONSTRUCTORS

Case Study #1 – Streets of St. Charles

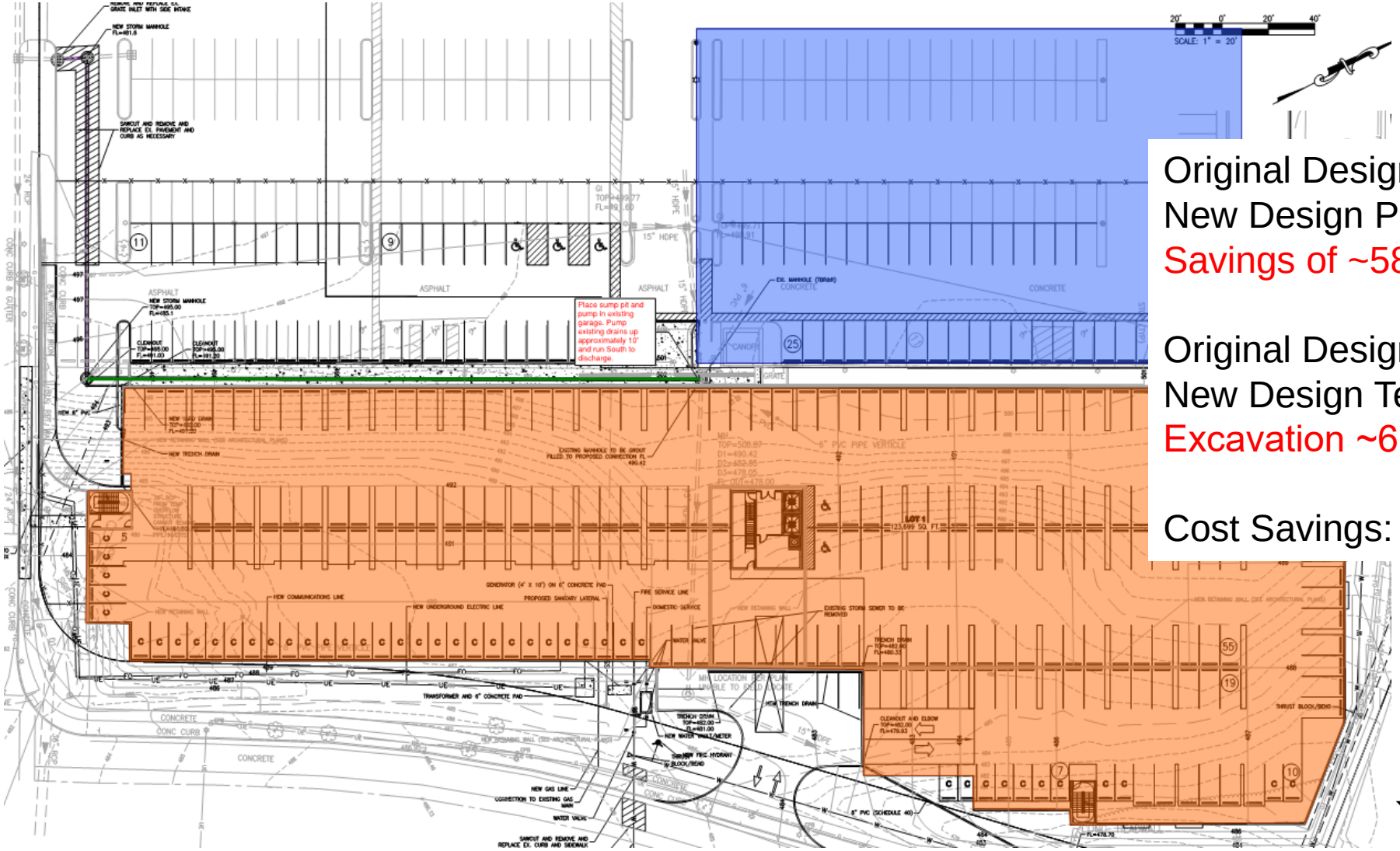

Original Design Pipe Length = 845 LF
New Design Pipe Length = 265 LF
Savings of ~580 LF Storm Sewer

Original Design Termination FL – 478.70'
New Design Termination FL – 485.1'
Excavation ~6.5' More Shallow

Cost Savings: Approximately $75,000

Brinkmann CONSTRUCTORS

Case Study #2 – Wildhorse Parking Garage

- Design/Build System
- 7’2” Overhead Clear Requirement in Garage
- Roof Drain Pipe: 10-16” Diameter Pipe
  - Needs to fall 1/16” per LF
- Runs up to 150 LF
  - 9 3/8” Drop
- 44” Deep Beams + 2” Fire Proofing
- Required Extensive Overhead Coordination
  - ~6 weeks of a superintendent coordinating 8-10 hours per week

Brinkmann CONSTRUCTORS

Case Study #3 – Third and Vine City Apartments

- Architect performed 3D scan of existing conditions
  - ALWAYS DOUBLE CHECK EXISTING CONDITIONS
- Penthouse Floor
  - 9’ Doors Specified
  - 12’ Corridor Ceilings
- Bottom of Existing Beams at 8’
  - Cannot core drill through beams
- Floor to include hot and cold-water loops
- Coordination issues and lost time in the field

Brinkmann CONSTRUCTORS

PISER Exercise

- 4” Sanitary Sewer
  - 200 LF Run to Tie In Location
  - Site Limitations – Can only achieve 18” of fall between points
    - 1/8” per LF fall required = 25”
  - Suggestions?

- Upsize pipe to 8” main and can reduce fall requirement to 1/16” per LF. Would only need 12.5” fall over same run.

Brinkmann CONSTRUCTORS

ADA vs. FHA

- What's the Difference?
  - Private vs. Public
    - FHA governs private communities – affects operation of ALL community associations
    - ADA applies only to places of public occupancy
  - Who is protected?
    - ADA only prohibits the discrimination of disabled individuals.
    - FHA prohibits discrimination based on race, color, religion, sex, nationality, and disability.

Brinkmann CONSTRUCTORS

Lunch & Learn Recap – ADA

- Transfer Showers
  - MUST BE EXACTLY 36” x 36” I.D.
  - Parallel Approach – 36” W x 48” L from Control Wall
  - Grab Bars – 250 LB minimum rated
    - Across Control Wall
    - Across Back Wall to 18” from Control Wall
    - 1 ¼” to 1 ½” Diameter

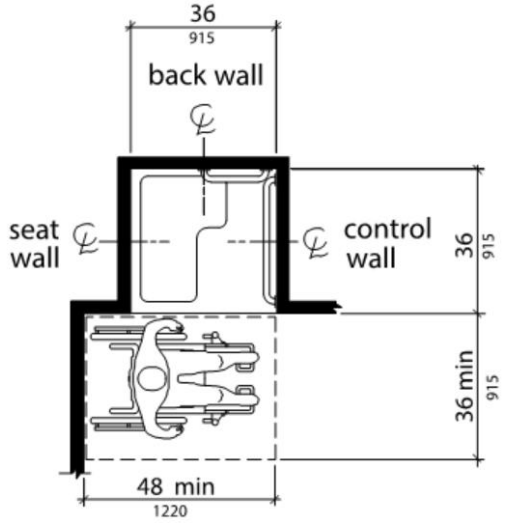

Brinkmann CONSTRUCTORS

Lunch & Learn Recap - ADA

- Transfer Showers (Continued)
  - Shower Seats
    - Must extend from back wall to within 3” of compartment entry.
    - Must be mounted so that top of seat is 17” minimum and 19” maximum above bathroom finish floor

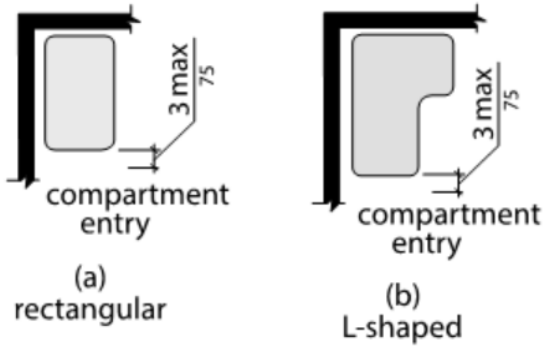

Brinkmann CONSTRUCTORS

Lunch & Learn Recap - ADA

- Transfer Showers (Continued)
  - Thresholds
    - ½” maximum height.
    - Must be beveled, rounded or vertical.
  - Controls
    - Must be installed on the side wall opposite seat
      - 38” minimum and 48” maximum height above shower floor.
      - 15” maximum from centerline toward shower opening.

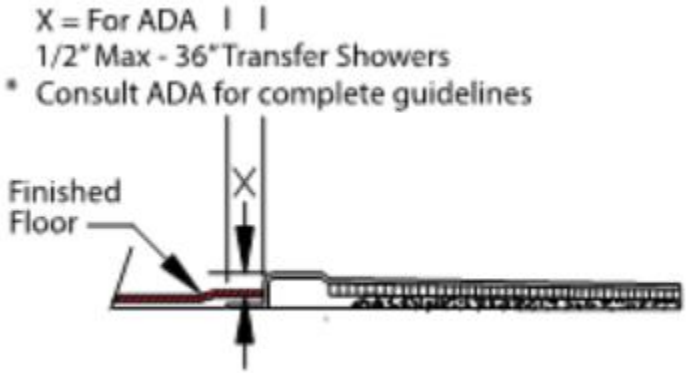

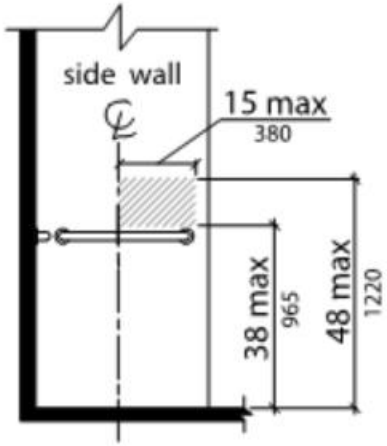

Brinkmann CONSTRUCTORS

Lunch & Learn Recap – ADA

- Roll-In Showers
  - Must be a minimum of 30” wide x 60” deep ID
  - Clear floor space of 30” x 60” required in the area adjacent.

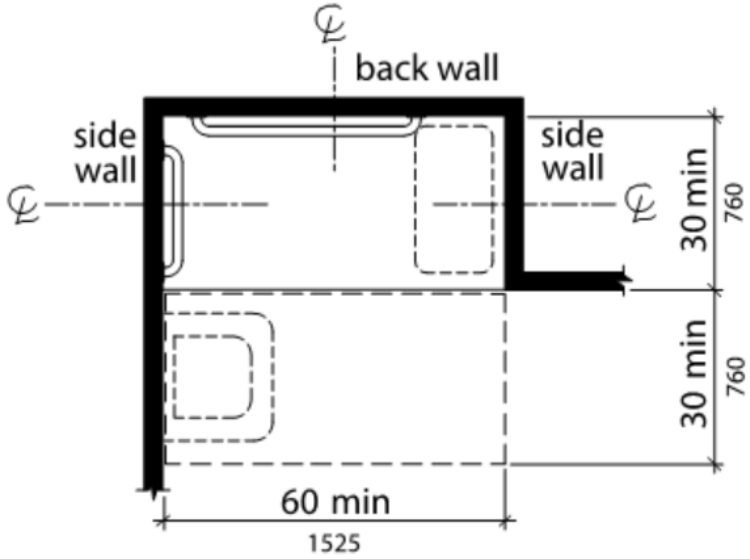

Brinkmann CONSTRUCTORS

Lunch & Learn Recap – ADA

- Roll-In Showers (Continued)
  - Grab Bars: Dependent on whether there is a seat or not
  - With Seat: Back wall and side wall opposite seat
  - Without Seat: Back wall and both side walls

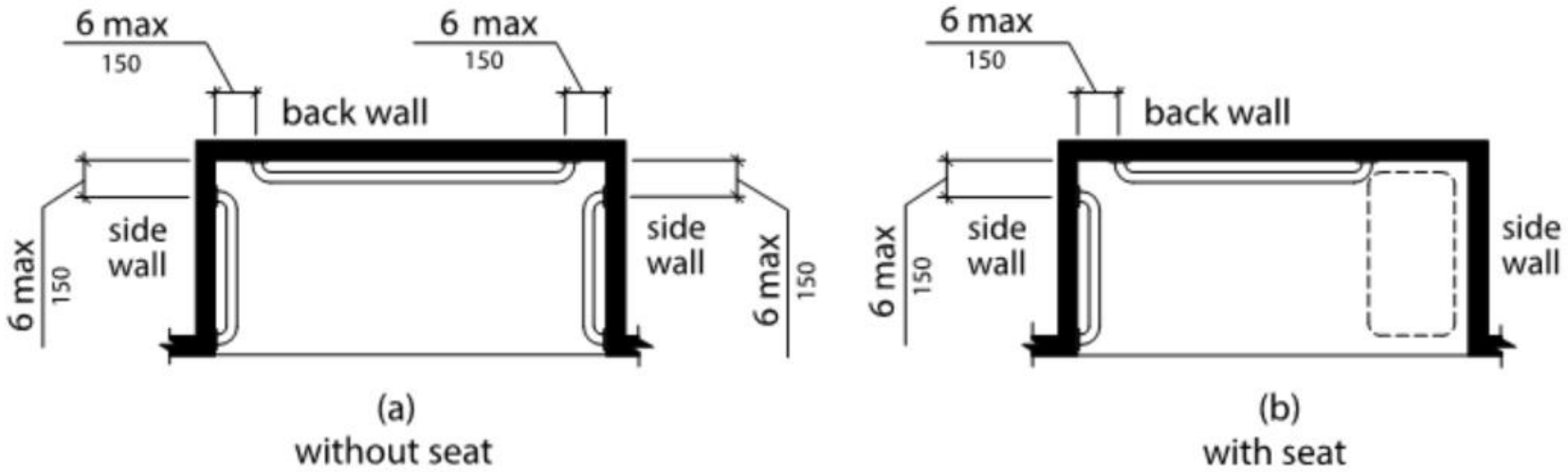

Brinkmann CONSTRUCTORS

Lunch & Learn Recap – ADA

- Roll-In Showers (Continued)
  - Thresholds
    - May be vertical or beveled
    - Max Heights
      - Vertical Entry: ¼”
      - Beveled Entry: ¼” Vertical with ½” rise

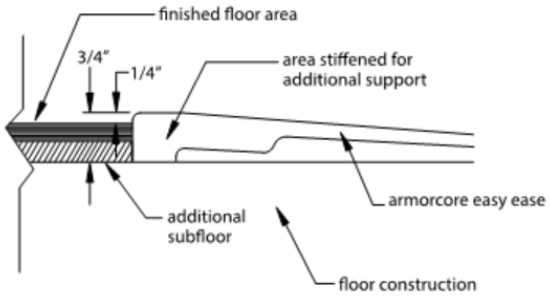

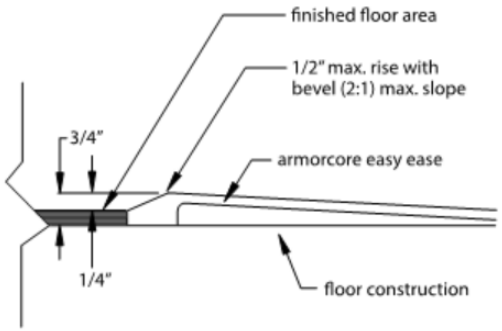

Brinkmann CONSTRUCTORS

Lunch & Learn Recap – ADA

- Roll-In Showers (Continued)
  - Controls
    - Placement dependent on whether there is a seat or not
    - ALWAYS located above the grab bar, but no higher than 48” above shower floor
    - With Seat: Installed on back wall adjacent to seat. 27” maximum from the seat wall.
    - Without Seat: Controls may be installed on any wall.

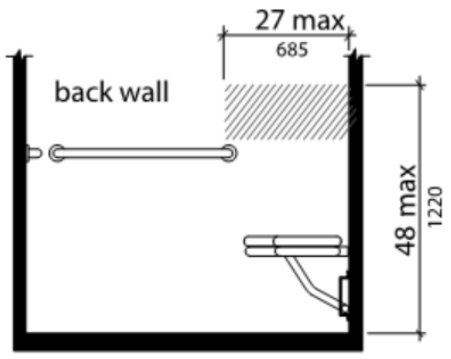

(by)
with seat

Brinkmann CONSTRUCTORS

Lunch & Learn Recap – FHA

- Any building constructed after 1991 must abide by these codes.
  - Currently have lawsuits popping up around the country from owners who are now looking to sell buildings but cannot due to FHA guidelines

Brinkmann CONSTRUCTORS

Lunch & Learn Recap – FHA

- What are “Safe Harbors”
  - Collection of ten (10) HUD-approved documents to be considered during design of multifamily developments.
  - If project only complies with ADA requirements of building code but not necessarily with one of the safe harbors – there is a risk of non-compliance.

Brinkmann CONSTRUCTORS

Lunch & Learn Recap – FHA

- List of Safe Harbors:
  - 1. HUD Fair Housing Act Guidelines and the Supplemental Notice to Fair Housing Accessibility Guidelines
  - 2. HDU Fair Housing Act Design Manual
  - 3. ANSI A117.1 (1986)
  - 4. CABO/ANSI A117.1 (1992)
  - 5. ICC/ANSI A117.1 (1998)
  - 6. Code Requirements for Housing Accessibility (2000)
  - 7. IBC 2000 with 2001 Supplement to International Codes amendment.
  - 8. IBC Code 2003*
  - 9. ICC/ANSI A117.1 (2003)
  - 10. 2006 IBC (loose-leaf format only)

Brinkmann CONSTRUCTORS

Lunch & Learn Recap – FHA

- Need to Know:
  - When shower is the only bathing fixture in the unit it must be at least 36” x 36”.
  - NO limits on curb heights.
  - A 30” x 48” clear space must be present at shower stalls, parallel to fixture and flush with the control wall.

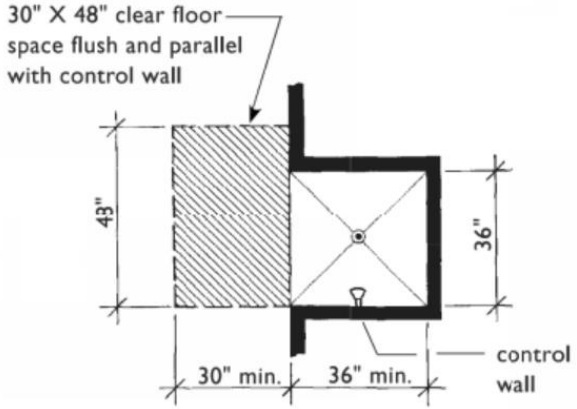

Brinkmann CONSTRUCTORS

Lunch & Learn Recap – FHA

- Need to Know (Continued):
  - ANY shower with an opening less than 50” cannot meet clear floor space requirement if it is installed in an alcove.
    - UNLESS: The finished front edge is flush or extends further out than the finished adjacent walls. Code doesn’t allow for any gap between shower and clear floor space.

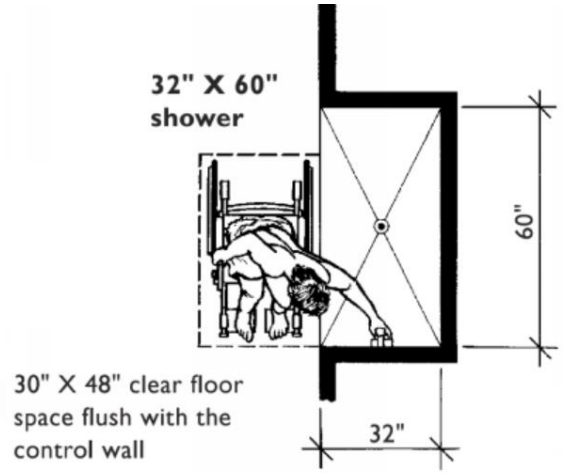

Brinkmann CONSTRUCTORS

Lunch & Learn Recap – FHA

MAIN POINTS OF THE FAIR HOUSING ACT DESIGN GUIDELINES

REQUIRED GUIDELINES

A FHA requires min backing for future bar placements in specific locations. Refer to the FHA design manual pages 6.8 thru 6.13.

B FHA requires that any unit manufactured with integral backing built into the unit be labeled as such and meets the ANSI pull test of 250 lbs or additional back will be required to fill the gap between the wall and the unit, see page 6.15.

C Clear floor space required: minimum of 30" x 48", parallel and flush to the shower curb and aligned with the face of the control wall; see page 7.56.

D When a shower is the only fixture available to a covered dwelling unit, FHA requires it to have a min interior dimension of 36" in both directions, see page 7.58.

E FHA contains no specifications on curb heights, see page 7.56.

Brinkmann CONSTRUCTORS

Lunch & Learn Recap – FHA

- Common FHA Misconceptions
  - Compliance with FHA is not required because the project is not financed or backed by HUD/FHA.
    - Fair Housing Act is an anti-discriminatory law that must be followed in all multifamily construction projects that consist of four or more units in one building.
  - Design compliance is the responsibility of the owner and/or architect.
    - The FHA states that anyone involved in the design OR construction is equally liability. This does trickle down and affect subcontractors.

Brinkmann CONSTRUCTORS

S.M.A.R.T. Ideas – Fixtures and Trim

- Specifications on water closets (Approved Manufacturers)
- Power assist toilets vs. flush valve
- Lavatory: bracket mount vs. carrier
- Floor mount water closet vs. wall hung
- Battery operated sensors vs. hard wired
- Showers: one piece unit w/ walls vs. tile
- P-traps: PVC vs. brass

Brinkmann CONSTRUCTORS

S.M.A.R.T. Ideas – Rough In/Piping

- Copper Piping: Type M vs. L or K
- PVC underground vs. cast iron (temp)
- Insulation: Armaflex vs. fiberglass
- Re-circulating loop: eliminate or redesign
- Roof/overflow drain insulation
- PVC vs. cast iron in chase and walls
- Switch from low to medium pressure gas system to decrease pipe size- savings on welding cost if pipe can be <2”

Brinkmann CONSTRUCTORS

S.M.A.R.T. Ideas – Misc.

- Floor Drain: PVC vs. cast iron
- Roof Drain: PVC vs. cast iron
- Floor sinks: PVC vs. cast iron
- Indirect waste: PVC vs. copper
- Eliminate additional drains in restrooms
- Use excavated fill as backfill

Brinkmann CONSTRUCTORS

Unit Costs – By Project Type

- Multi-Family/Student Housing/Senior Living
  - $3,800-4,800/Kitchen
  - $3,800-4,800/Bath
  - $9.00-16.00/GSF
  - $5.00-$7.00/SF for Retail Shell Build Out
  - $5.00-$10.00/SF for Interior Amenity Space
  - $0.75-$1.50/SF for Garage Space
    - Majority of this cost is storm drain
- Warehouses:
  - $0.40-0.50/SF
- Self-Storage:
  - $0.80-.95/SF
- Auto Dealerships
  - $3.75-6.00/SF
- Surgery Centers
  - $24.00-26.00/SF

Brinkmann CONSTRUCTORS

Means and Methods

- Look at Foundation Package
  - Sleeves
  - Who goes first
- MEPFP Underground Coordination
  - Who goes first
  - What’s the deepest

Brinkmann CONSTRUCTORS

Means and Methods

- MEPFP Above Ground Coordination
  - Ceiling Heights
  - Structure Height
  - Who goes first
- Roof Drains
  - Required Pitch
  - Working Through Joists
- Drains in Parking Garages

Brinkmann CONSTRUCTORS

Means and Methods

- Chase Wall Width
  - Back to Back Bathrooms
  - Carrier Walls
- Finish Floor Heights
  - Compare to Fixtures
  - Compare to Floor Drains

Brinkmann CONSTRUCTORS

Scheduling

- Permit Status
- Inspections
  - Meet with inspector first
- How much trench per day at each depth
- What size pipe?
- Soil Types
  - Reference geotech report during pre-con when putting initial schedule together

Brinkmann CONSTRUCTORS

Scheduling

- Wet testing vs. dry testing
- Site Constraints
- Site Logistics
- Venting at Roof Penetrations
  - Combine into 1
  - Multiple penetrations

Brinkmann CONSTRUCTORS

Questions?

Brinkmann CONSTRUCTORS